SUGGESTED SIGN WIDTH:
26" - 38"

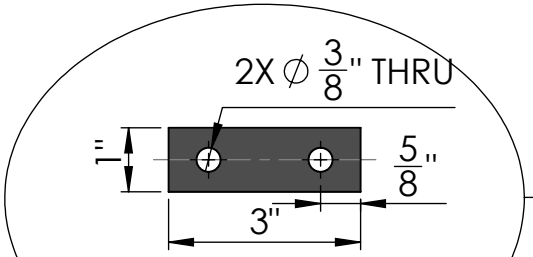

SIGN MOUNT BRACKET DETAIL

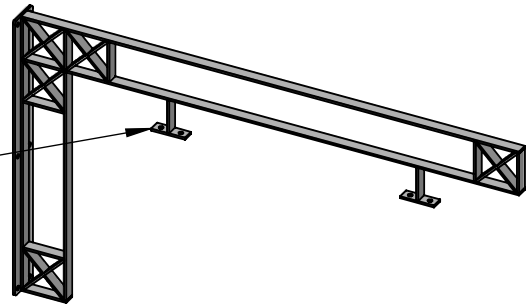

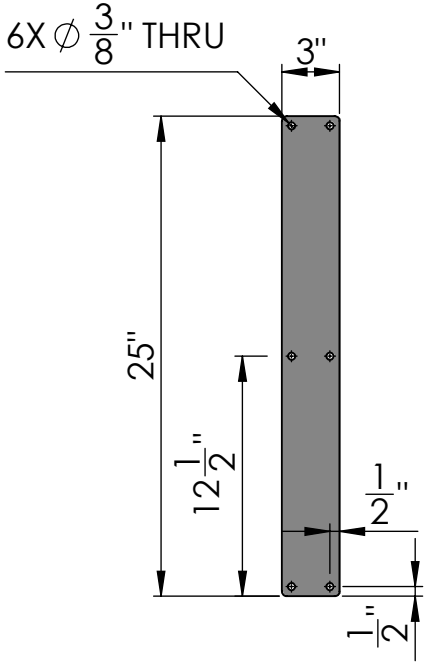

SIDE VIEW

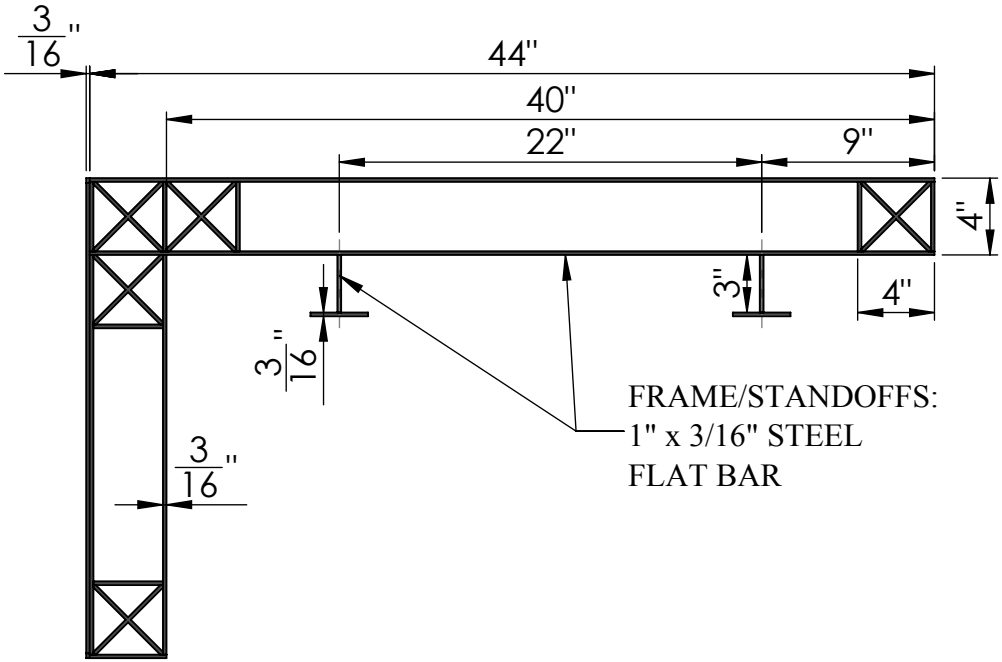

FRONT VIEW

Date: 05/2015
Scale: NTS
CB:
Order#:

Content: 44" HD Crosshatch Truss Fixed Mount Bracket
PN: 1153-44
Color/Finish: Textured Black Powder Coat

Customer Approval: _____

Design by Sign Bracket Store. All visual representations and designs are the intellectual property of Sign Bracket Store and protected under copyright law. Any duplication of this design is in direct violation of the law and will result in legal action.

© Copyright 2008-2015

SIGN BRACKET STORE
By Hooks & Lanterns SignBracketStore.com

T: 888-919-7446 **F: 760-603-0812**